NOTES: UNLESS OTHERWISE SPECIFIED

REVISIONS				
ZONE	SYM	DESCRIPTION	DATE	APPROVAL
	–	RELEASED FOR MANUFACTURING		

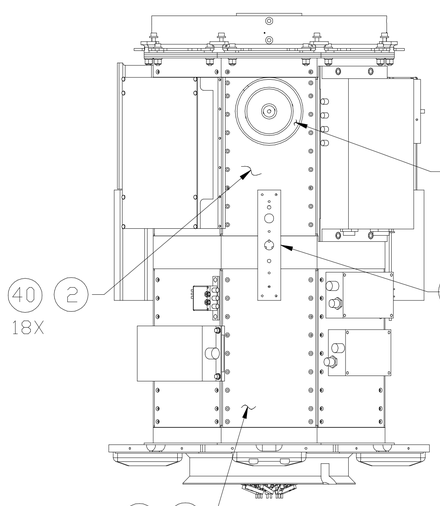

FACET 1

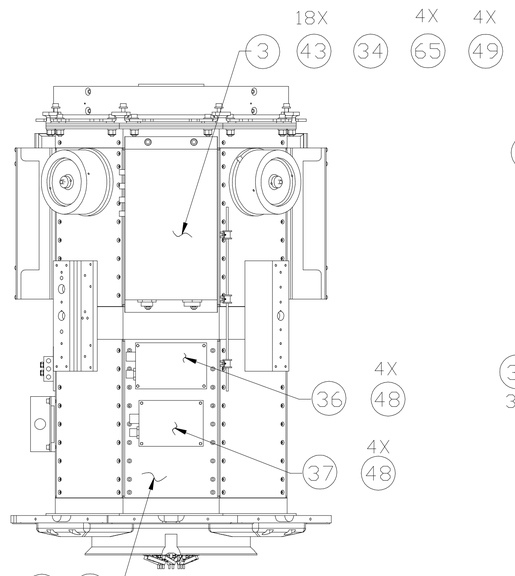

FACET 2

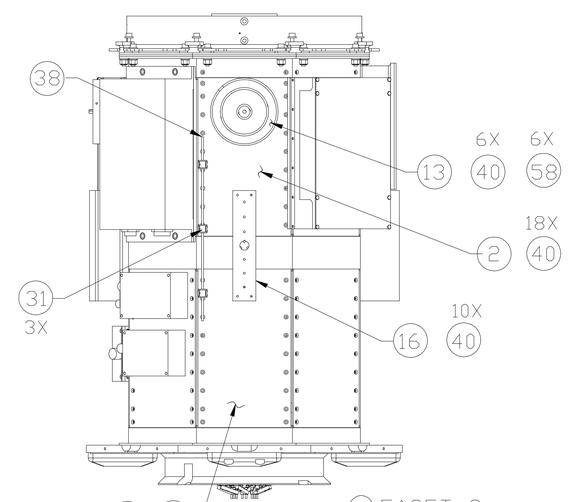

FACET 3

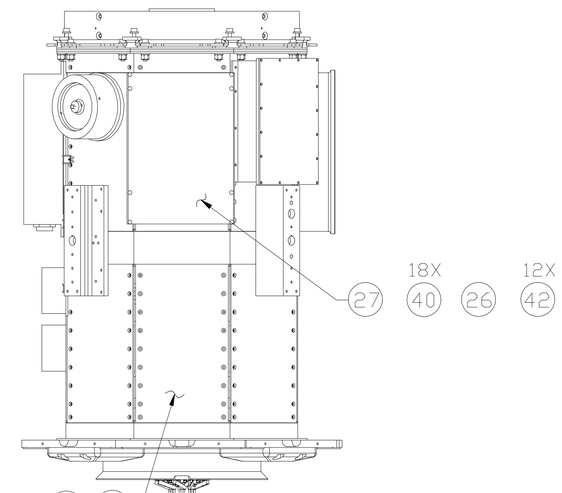

FACET 4

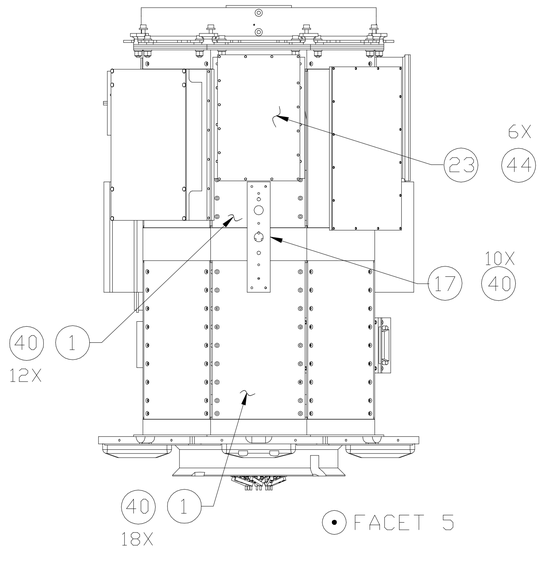

FACET 5

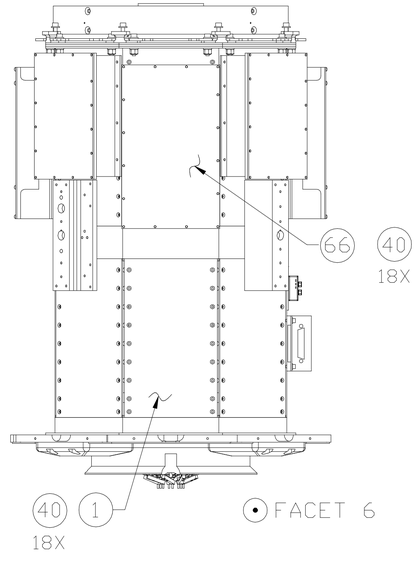

FACET 6

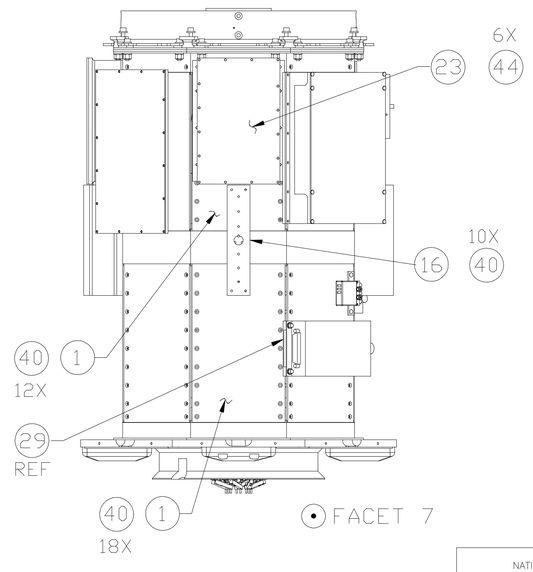

FACET 7

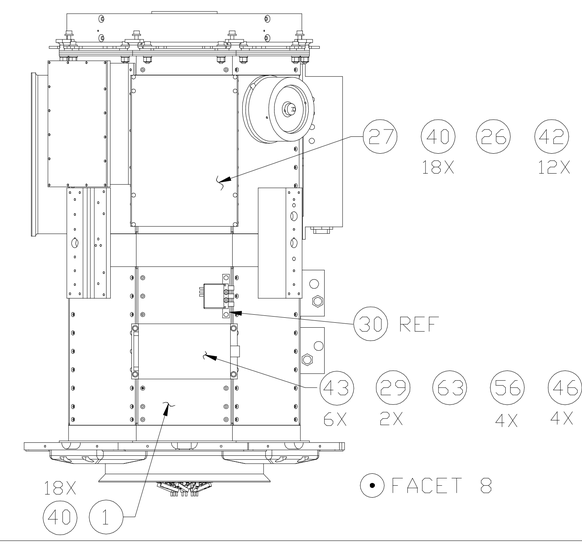

FACET 8

THIS DRAWING WAS PRODUCED USING:
SOFTWARE: AUTOCAD VERSION: 14
FILE NAME: 2020121_2.DWG

NEXT ASSY	USED ON
NONE	SIMPLESAT

NATIONAL AERONAUTICS AND SPACE ADMINISTRATION — Goddard Space Flight Center — GREENBELT, MARYLAND

UNLESS OTHERWISE SPECIFIED–DIMENSIONS ARE IN INCHES
TOLERANCES:
.XX ±.01 .XXX ±.005 ∠ ±1° FRACTIONS ±1/16 63
REMOVE ALL BURRS AND SHARP EDGES .010R OR CHAMFER MAX.

- ☐ FLIGHT HARDWARE/POST FAB HARDNESS TEST REQUIRED
- ☒ HARDNESS TEST NOT REQUIRED
- ☐ TEST HARDNESS PER ASTM E–18, LOCATION OPTIONAL
- ☐ TEST HARDNESS PER ASTM E–18 WHERE INDICATED ON FIELD OF DRAWING THUS ⊙
- ☒ NO NON–DESTRUCTIVE EXAMINATION (NDE) REQUIRED
- ☐ NDE REQUIRED PER S–313–009 CODE _____

	NAME	INIT	DATE
DESIGNER	W. WELCH		
DRAWN	W. WELCH		
CHECKED	–		
APPROVED	D SKILLMAN		
APPROVED	–		
APPROVED	–		
APPROVED–ENGINEER	–		

DRAWING INTERPRETED PER GSFC–X673–64–1E

TITLE ASSEMBLY, SPACECRAFT, SIMPLESAT

GD 2020121 –

CODE 924 | SCALE 1/4 | WT | SH 2 OF 3

GD2020121 –